USER'S MANUAL

PHB-750

MAGNETIC HYDRAULIC BRINELL HARDNESS TESTER

Contents

1. General Safety Precautions. ····· 1
2. Introduction ····· 1
3. Main Technical Parameters- ····· 2
4. Principle & Structures ····· 3
5. Operations ····· 3
   5.1 Preparation ····· 3
   5.2 Operation ····· 5
6. Introduction of Main Parts ″ ····· 6
   6.1 Indenter ····· 6
   6.2 Gauge ····· 6
   6.3 Loading Lever ····· 6
   6.4 Pressure Release Lever··· ····· 6
   6.5 Control Valve ····· 7
   6.6 Oil Cylinder ····· 7
   6.7 Magnetic Chucks ····· 7
   6.8 Iron Seat ····· 8
7. Standard Assembly ····· 8
8. Optional Accessories ····· 8

Appendix1: Maintenance Manual
Appendix2: Brinell Hardness Table
Appendix3: Testing Accuracy of Brinell Tester
Appendix4: Testing Conditions for Brinell Hardness Testers
Appendix5: Selection of Testing Conditions for Brinell Hardness Testers
Appendix6: Conversion of Brinell Hardness and Tensile Strength

1. General Safety Precautions

Please read carefully and understand completely the following parts about safety precautions, before operating the hardness tester

1.1 About hardness tester falling

This hardness tester is made of iron and steel, so the weight is relatively heavy and the careless falling would cause injuries to men or severe damage to the device. Therefore, please follow the below safety precautions strictly.

1.1.1 Place the tester in a flat and steady location, in case of falling, when unused.

1.1.2 Prevent falling from hand when moving it.

1.1.3 Hold the tester firmly when testing work pieces in surface shape of cylinder or tilt. Pay attention that the tester would possibly fall from the surface in loading test force. Thus, it should be operated very carefully to avoid of injury to people.

1.1.4 The iron seat should be placed steadily as well, preventing injury to people.

1.2 About high-intensity magnetic field

When the hardness tester is in operating, it will cause high-intensity magnetic field. And if close the magnetic chucks, the magnetic field will be a closed circle inside the hardness tester, without any influence to outside. If open the magnetic chucks, the magnetic field will be open to outside and hardness tester equals to a high-intensity magnet, at this time if operated carelessly, it would dash to nearby iron and steel products. Then it would cause severe injuries to persons or damage to hardness tester. Therefore, both kept in stock and operated, these regulations should be obeyed strictly.

1.2.1 Only when the hardness tester placed in iron seat or work piece steadily, the magnetic chucks are permitted to open.

1.2.2 In the process of loading force, if the magnetic force is not strong enough, the hardness tester will fall off the work piece, and the magnetic chucks have to be close immediately.

1.2.3 In normal operation, it is easy to open the magnetic chucks and if it is hard to open, the next step is to find the reason other than force to open the chucks.

2. Introduction

Magnetic Hydraulic Brinell Hardness Tester is consist of 2 magnetic chucks and 1 hydraulic Brinell hardness test head, which is applied to test body hardness of huge iron and steel work pieces on site.

The test condition of the hardness tester is 5mm diameter test ball and 750kg test force, so the values of $F/D^2=30$, of which the test result equals to the test condition of 10mm test ball and 3,000kg test force. The method complies with the regulation of ASTM E110. And the test accuracy complies with regulations of ASTM E10 and ISO 6506.2. The values delivery is from standard Brinell hardness block, which can be

traced to National Standard Brinell Hardness Tester in China NIM (National Institute of Metrology). The carrying case is made in Italy, which is fine quality with a lifetime longer than 10 years in normal use.

It can only be applied in magnetic iron and steel work piece, not those non-magnetic nonferrous metal, high manganese steel, wear resisting cast iron and austenitic steel, etc.

It can be applied in testing flat surface work pieces and mono-diameter cylinder work piece with diameter larger than 150mm by specific customized cylinder adapters. If testing pipe materials, the thickness of the shell of pipes should be larger than 15 to 20mm, depending on different diameters.

It could test steel plates, pipes, bars, moulds and huge castings, forgings, and heat treatment work pieces as long as the test area is big enough.

Only by one side attaching, it could finish the test, so it solve the limits of opening width in hydraulic Brinell tester that can not test huge work piece. Compared with small magnetic Brinell and Rockwell hardness tester with test force of 187.5 kg, it applied larger test force and test ball, so it improves the accuracy and requires less of the roughness demand of the surface, and is more suitable for castings.

It is suitable for site hardness test, and applied in casting, forging, and heat treatment workshop to in line quality control. It can be also applied in raw material inspecting before accepting in stock.

The results are true and reliable, with the same accuracy as desk testers. The Brinell hardness indentation could be used for re-inspecting. The results satisfy most requirements of products standard and technical drawings, replacing the Leeb hardness tester to testing some important work pieces with high requirements of accuracy and reliability.

3. Main Technical Parameters

Test Force:	750kg
Indenter:	5mm carbide ball indenter
Testing Range:	100-650HBW
Error Indication:	comply with ASTM E10, ISO 6506.2
Repeatability:	comply with ASTM E10, ISO 6506.2
Net Weight:	15.8kg
Tester Dimension:	LxWxH(316mmx142mmx234mm) (without loading handle and magnetic switch handles)
Piece Dimension:	Flat: Area ≥ 292mmX92mm Cylinder: Diameter ≥ 150mm, Length ≥ 292mm Shell Thickness ≥ 15-20mm

4. Principle & Structures

The core part is a small hydraulic system. The operator could load 750kg test force by using the handle. There is a release valve to control the test force. When the force reaches 750kg, the release valve will open and close and then the pressure will fall down. According to ASTM E110' it is kept loading to make the indicator of the dial point at 750kg test force for 3-4 times altogether. Thus it is equivalent to the test condition of Brinell hardness testing method to hold test force for 10-15 seconds.

The structure of the instrument is shown as Fig .1.

The instrument consists of 2 magnetic chucks and 1 test head.

The test head is installed in the middle of 2 magnetic chucks which are controlled by switches to attach and leave the work pieces. Magnetic chucks can fix the test head to the surface of work piece and keep the test head steady under 750kg test force.

The test head is composed of gauge, hydraulic pump, ball indenter, oil cylinder, pressure release lever and operating lever.

The test head is a small hydraulic system. The operator loads force through handle to drive the pump to provide a strong enough force moving the piston and then load the test force to work piece by indenter. The function of the dial gauge is to show the value of test force; the release valve is to control the test force on indenter to maintain or release; and the control valve is to control the max test force of 750kg and prevent over loading.

5. Operations

5.1 Preparation

5.1.1 Prepare the work piece

Choose an appropriate part of the work piece which would provide a good attaching area between magnetic chucks and work piece. It should keep the surface of the work piece erecting the axis of the test head after attaching. It could only be applied in testing flat and mono-diameter cylinder work piece. The specific adapter has to be installed before testing cylinder work pieces. The rust and dust around the test point should be removed before testing. If the surface of the test piece is rough or scale, hardened or decarburized layer exists, proper grinding is required. Grind the work piece until the body is appeared and the surface should be smooth, otherwise it will increase the indicator and repeatability errors. When testing the cylinder surface work piece, the test point should be grinded until a flat smooth area appeared. High quality rechargeable angle grinder can be purchased in Tianxing.

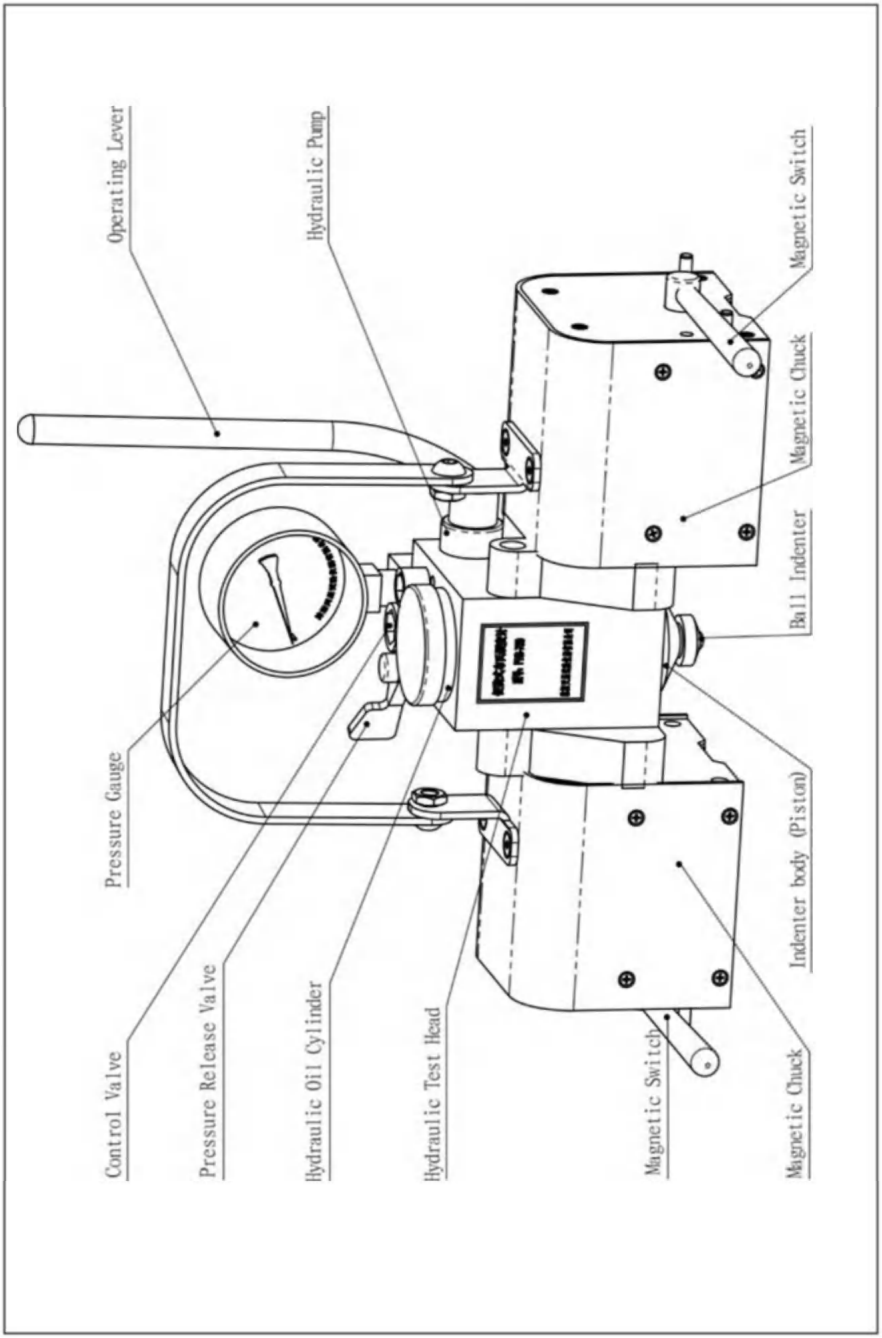

Fig 1: Sketch of Hardness Tester

5.1.2 Calibration of the tester

The accuracy calibration of the tester has been verified before delivery with a calibration certificate attached. Wrong operation or delivery incident or long time operating will affect the accuracy of test results. So for insuring the accuracy, it should be calibrated every time with the hardness block before testing. According to regulation, times of force loading should be 3-4 for iron and steel work piece: 3 for hard work piece; 4 for soft work piece. The times of force loading for highest accuracy should be determined when calibrate in hardness block. And the times could be a reference for similar hardness materials in the future.

5.1.3 Installing the cylinder adapter

When testing suitable cylinder work piece, the special cylinder adapter should be installed first. The cylinder surface of adapter corresponds with e work piece, fixed by screws to the bottom of the instrument. The adapter is customized specially with the same curvature as work piece. After installing, there should be no obvious space between adapter and work piece.

5.1.4 Check the indenter

Check the indenter before testing and make sure the indenter holder is fastened tightly; otherwise it may damage the indenter ball or make it lost.

5.1.5 Operation preparation

Place the instrument on the surface of the work piece, open the magnetic switch, install the loading lever and open the pressure release lever, then check the test head whether raised in highest height of original position. If the test head is not in original position, please use the lever to push it back to original position.

5.2 Operation

Close the pressure release valve and move the loading lever; load the test force on the work piece and watch the gauge. The dial begins to move to 750kg scale. Continue to move the loading lever until it reaches 750kg, the control valve will work and the pressure will fall down. Repeat this procedure to make the dial point reach 750kg for 2-3 times (totally reaches 750kg for 3-4 times). Then the progress of loading force is finished. Open the pressure release lever, raise the test head back to original position with lever (attention: the test head has to be pushed back to original position after every test). Close the magnetic switch and move the tester away from the work piece. The indentation has been on the surface of the work piece. Use reading microscope to measure the diameter of the indentation. Check the appendix 2 for Brinell hardness values.

If temporarily no need to test, the loading handle should be disassembled and ensure the magnetic switch is close, for protecting the instrument.

6. Introduction of Main Parts

6.1 Indenter

The indenter is composed of indenter body, test ball and indenter holder.

The indenter body is a piston in hydraulic system to load test force. The pressure in the hydraulic system will push the piston to load test force which will apply to test ball then to make indentation on the surface of work piece.

The test ball is a carbide ball which complies with the latest standard of Brinell hardness testing. The carbide ball is extremely accurate, hard with a performance of wearing resistant and long lifetime. However it cannot test the chilled steel whose hardness is more than 60HRC, otherwise the indenter will be damaged. The spare carbide ball can be purchased from the Tianxing.

The indenter holder is used to fix the ball. Make sure the indenter is fixed well before each testing

6.2 Gauge

The gauge can show the test force for operator's observation only. It can not control the 750kg test force.

Prevent the gauge from crashing and never disassemble it.

6.3 Loading Lever

The function of the loading lever is to control the hydraulic system loading test force.

The reciprocating motion of the loading lever can make the small valve in hydraulic system pressing the cylinder, and then the pressure will transfer into the large valve-indenter body by oil. After suffering the large press, the indenter will move and output the test force.

If the test head is not back to original position before test, it may not provide enough move distance for test head, leading to lack of loading force to work piece.

Disassemble the loading lever if not using temporarily, prevent unauthorized person operating wrong.

6.4 Pressure Release Lever

The pressure release lever is the switch of the hydraulic system. Open the pressure release lever, then the pressure will take off whereas close the pressure release lever, the hydraulic cylinder will keep closed. At this time, the operator operates the loading lever and the hydraulic oil will flow to test head loading test force, moving the test head. Therefore, the following steps are required:

a. When not using the tester, keep the pressure release lever open.
b. Only when attached to the surface of test piece, close the pressure release valve before loading test force.
c. After testing, open the pressure release and raise the test head backward,

close the magnetic switch and remove the instrument immediately.

6.5 Control Valve

The control valve is the pressure switch of hydraulic system. Before delivery, the cracking pressure of the control valve is calibrated accurately to 750kg. When the force of test head reaches 750kg, the control valve will instantly open and close immediately, and then the pressure in cylinder will fall down. Repeat these processes for 3-4 times, and a Brinell test is finished.

The control valve has been calibrated accurately before delivery, so it is prohibited to drive the screw of the control valve optionally, otherwise the tester will lose accuracy.

6.6 Oil Cylinder

The oil cylinder is composed of oil cover, locking nut of oil sac, oil sac, and sump.

When the indenter extends or retracts under the effect of test force and crank, the oil volume in oil cylinder will change. This change will be adjusted by oil sac pressing or releasing, so that it can ensure there is no negative pressure and cavity in the sump and also no oil slopping over. The oil will leak a little during the operation.

This instrument is improved on the indenter seal which makes the oil do not leak as much as the other products; however it is inevitable after long time operating. The indenter can not make a standard Brinell indentation because of not enough movement dues to oil volume reducing. The typical effect of that is no matter how to operate the loading lever; the test force can not point at 750kg full scale.

If this happens, add or change the oil.

Normally, changing oil should be done by the manufacturer or the branch offices that have been trained. For certain qualified operators who try to do this by themselves should follow manufacturer's supervision. The process of replacing the oil in sump is complicated, any carelessness will result in mistake and the tester has to be sent back to the manufacturer.

6.7 Magnetic Chucks

Magnetic chucks are fixed beside the hydraulic test head, providing attaching force for it and controlled to attach or leave the surface of work piece by magnetic switch. When the handles of the magnetic switch are in the position of from oriental, the switch is closed, the instrument leave the work piece and whereas back oriental, attach.

If the end of the handles are not oriental, it may cause insufficient attach force, leading to measure failure. Please pay attention to it.

In delivery, the handles should be disassembled and packed in the corresponding position in carrying case.

6.8 Iron Seat

Iron seat is for calibration, made of high permeability magnetic pure iron material.

When calibrating, place its groove upward on a steady location, and attach the instrument to it, and put the hardness block into the groove, then start testing the hardness block.

7. Standard Package

1 Tester
1 Loading lever
1 Standard Brinell hardness block (High value)
1 Standard Brinell hardness block (low value)
1 Crow bar
1 20X reading microscope
2 Spare carbide ball indenter
1 Iron seat
1 Carrying case
1 Warranty certificate
1 Manual

8. Optional Accessories

Standard hardness block (high value)
Standard hardness block (low value)
5mm carbide ball indenter
Indenter holder
Slotted point screwdriver
Iron seat
Ejector Rob
Carrying case
20X reading microscope (with LED light)
Rechargeable angle grinder Automatic Brinell indentation reading instrument

Maintenance tools and accessories

Hydraulic oil Injector (for oil injecting)
Sac
Sac nut
O ring
Bronze bushing
Bronze sealing of hydraulic pump
Bronze sealing of control valve
Bronze sealing of air releasing hole
Sac nut wrench
Control valve wrench
Release valve wrench

Appendix1:

Maintenance Manual

Some parts of the tester may be worn after long time use, for example, seals leakage, difficulty in loading full scales force, inaccurate test result, and difficulty in retracting the indenter, deformed or worn indenter, loose support frame, etc. If these problems occur, the tester needs to be repaired.

Some of the maintenance tasks must to be done by the manufacturer, if any, just send it back to the manufacturer.

Some of the maintenance tasks should be done by the distributors. For the main distributors, the manufacturer will train for their technical team to make them qualified to calibrate the tester, change oil or accomplish some of the maintenance work skillfully. The user can repair their testers at the nearest distributor.

Other maintenance tasks can be accomplished by the user. Because of time, location or transportation limitation, some end users can not send the tester back to manufacturer or distributor. The user who has professional technicists can do it alone to change oil, calibrate tester and repair the seals according to the maintenance manual. If there is any difficulty during the repairing, contact the manufacturer for support. Parts and tools for changing oil can be bought from the manufacturer.

As a general rule, the used O-rings, seals, bronze seals and other seals and sac and hydraulic oil have to be changed into new ones. The repeated use of the old ones will affect the performance of the tester.

Normal problems and solutions are as follows:

1. Hard to load test force

If it is impossible for the test force to reach full scale of 750kg, the possible reasons and solutions are as following:

1.1 Indenter over-extending

Push the indenter back to the original position every time after test. If the action is not done, the move distance may not long enough to load 750kg to the work piece.

1.2 Oil insufficient

After long time use, the hydraulic oil will lose and the remaining volume is not enough to produce proper movement of indenter, so that it can not apply full scale of 750kg test force on the specimen.

If this happens, the solutions are as follows:

1.2.1 Check the hydraulic sump

Disassemble the loading lever and check if there is oil near the bronze

Fig. 2 Diagram of Test Head

bushing. If so, it means the O-ring in the bronze bushing is worn. Both of the O ring and the bushing need to be changed for new ones. The operation process of it is as follows:

Take off the test head from the carriage, make the sump upside and put it on the desk. During this process, take care to avoid oil leakage. Use the special wrench for bronze bushing to take the bronze bushing off. The bronze bushing has a left-hand thread which is different from other threads, so turn it clockwise. An O ring will be found in the bronze bushing. If the O ring wears, some oil will leak from bronze bushing. Fill the hydraulic sump with oil, take off the worn O ring, insert a new one and screw tightly. There will be some hydraulic oil overflowing around the bronze bushing. Clean the test head with soft cloth and cleaning fluid and install back the test head. Other parts of the hydraulic sump can not be taken down or changed except for bronze bushing and o ring.

1.2.2 Changing hydraulic oil

To use oil of correct type and viscosity is vital important. Mobile oil SAE50 is the best (Saybolt 956 Sees at 100°F) and it can be bought locally. The spare hydraulic oil and the tools for changing the oil can be bought from manufacturer or retailer.

The procedures of changing oil are a little complicated, change the oil strictly following the instruction. Any disoperation may result in permanent damage of the parts.

Procedures are as following:

a. Put the instrument onto the iron seat, close release valve, move loading Lever, press the indenter maximumly.
b. Screw off the cap and use the special wrench to take off the sac nut under the cap, and then take out the sac.
c. Open the pressure release valve. Turn the crank in order to make the whole indenter come into the test head body.
d. Close the pressure release lever.
e. Close the magnetic switch, lean the instrument upward to dump all the used oil off, then attach the instrument to the iron seat again.
f. Place a waste hardness block or other iron thinner than hardness block into the iron seat.
g. Fill sump with oil, align the oil level with the step of the cylinder, approaching to the upper edge of screws and turn the loading lever and push the indenter out. At this moment, the oil level will fall down. During the operation, keep the oil level not lower than step level all the time. It could press the indenter out, at the same time add oil until the arrow of pressure gauge gets close to 750kg. Open the pressure releasing valve releasing

pressure, close the pressure releasing valve and add to 750kg again, then open the pressure releasing valve. Repeat the above steps, and in the process bubbles will get out of the sac and the oil will get dirty step by step (customer decides to change the oil again or not, depending on how dirty). Keep repeating the process above until no bubbles occurs.

h. Open the pressure release valve, push the indenter back to original position and the take off the hardness block or iron on the iron seat.

i. Operate the loading lever, press the indenter out slowly, at this time the oil level will drop. During this process, the indenter should be pressed out, at the same time add oil with injector to make the oil level maintain the same until the indenter is press out about 10mm.

j. Take off about 1/3 oil with injector.

k. Put back the sac slowly, at this time the oil level will be higher. In case of too much oil flow to the outside of the hydraulic head, the oil should be taken off by injector until the sac reaches the bottom. Fasten the screw quickly, and clean the oil inside of the sac, cover and screw the sac cover and clean the oil on the surface or other parts with soft cloth and cleaning liquid.

I. open the pressure release valve.

The change of oil is finished.

1.2.3 Inspecting test head

If it is difficult to load test force during a short time after changing oil, that indicates the X ring may wear. X ring can not be changed by the user. They Must be sent back to the manufacturer for maintenance.

1.3 Air in the hydraulic system

If air runs into the hydraulic system, it will also cause the problem. There are 2 main reasons: one is test without pushing the indenter back to original position after previous test, which causes the indenter stretch too much and negative pressure happens and absorb air; the other one is the improper operation when changing oil. In the inner shell of the cylinder, 3mm below the oil step, there are 2 oil holes. In the process of adding new oil and pressing out the indenter and put in the sac, some air will run into, if the oil level is too low.

The following steps will be operated in such a possibility:

Attach the instrument to the iron seat; push the indenter to original position with craw bar; put a waste hardness block or a iron thinner than hardness block. Close the pressure release valve, load pressure to 750kg and open pressure release valve.

Repeat the above process over 10 times.

Close magnetic switch, take the instrument off the iron seat. Turn around the instrument, and place the instrument on 2 flat stages with proper distance.

Prevent the damage to the test head in the process. Find the air release holes on the bottom of the test head, screw off the air release screw, fill the hole with injector, install and fasten the screw. Attach the instrument to the iron seat again, operate loading and releasing pressure 2-3 times.

2. Instrument misalignment

The tester may be inaccurate after long time use. It shows that the readings will be out of specified range when testing on the standard test block. See Appendix 3

Probable reasons and solutions:

2.1 Incorrect numbers of loadings

To be equivalent to the condition for Brinell hardness test method of holding 750kg test force for 10-15 seconds with 10mm indenter. The tester is ruled to be forced for 3-4 times to make 750kg. If the tester is a little out of tolerance, add 1 or 2 more times for loading force so that it can make readings approaching to the real readings. Reduce 1 loading time when test hard material. Add 1 loading time when test the soft material.

2.2 Expired block

The block has been inspected before leaving factory and the hardness value marks on the front face or side face of block as well as its inspection date is on the certificate. The valid period of blocks is one year and it should be rechecked after one year otherwise the hardness value is not reliable, and the tester calibrated with the expired block will be inaccurate. New test blocks can be bought from the manufacturer.

2.3 Deformed and worn ball

The carbide ball is durable and hard with high accurate dimension. After a long time use and the wrong operation or testing on hard materials, the ball may become deformed or worn.

When the tester is inaccurate and the block is verified to be not the reason, remove the ball and twirl the ball in order to change its testing surface, then reinstall it on the test head and fasten the ball cover.

It may take several times to renew the testing surface in one ball. After too many times of the renewal, the ball cannot be used again and needs to be changed for a new one. New balls can be bought from the manufacturer.

2.4 Inaccurate test force

After eliminating the reasons of blocks and balls, the accuracy of 750kg test force can be the probable reason.

The 750kg test force has been calibrated before leaving factory and its tolerance is less than ±1%X750kg.

Accurate test force calibration requires dynamometer with high accuracy which operators normally don't possess. So the accurate test force calibration should becarried by the manufacturer or qualified measure department. If it is inconvenient to forward the tester to the manufacture and find a relevant measure department when the test force is inaccurate, the operator can try to do a rough calibration.

The 750kg test force is controlled by the control valve. If the 750kg test force needs to be recalibrated, follow the steps bellow. First, turn the loading lever in order to make the indenter extending as far as possible. Second, use an Allen wrench to remove the control valve cover and take off the copper gasket, then oil will be seen through the hole of control lever, and a calibrating screw is underneath. Use straight screwdriver to search for the calibrating screw under the oil and turn it a little. If the hardness is a little higher, turn the calibrating screw clockwise; otherwise, turn the calibrating screw anticlockwise. Make sure the angle turned is not too big otherwise it is hard to find the original calibrating point and the test force may be out of the secure range and the tester may be damaged.

After adjusting the screw for control valve, verify the tester with the test block. If it is out of tolerance, repeat the processes above until it is accurate.

After adjustment, fill the hole with oil. Replace the copper gasket with a new one and screw the cover tightly.

The screw for control valve can be adjusted only a little. Too much adjustment and taking it off are not allowed.

Other reasons for being out of tolerance, please contact manufacturer.

3. Leakage of pressure release valve

There are three sac rings in the pressure release valve for sealing. The sealing rings will be damaged after long time use which makes the sealing effect worse, and oil will leak slightly. Check the pressure release lever during the testing. If there is a little oil leaking from the lever, do as the following processes:

Firstly, turn the loading lever to make the indenter extending as far as possible. Secondly, remove the screws of the pressure release lever with a screwdriver and take off the crank. There will be a nut beneath it. Use the wrench for pressure release lever to screw the nut, turn clockwise 1/6-1/8 round. Fill the hole with oil and reinstall the pressure release handle and fasten it with screw.

The maintenances of pressure release valve are limited to the above procedures. The release nut can not be removed by the user.

Caution:

Only the maintenance tasks listed in this manual can be carried out by users. Any other maintenance tasks and disassembling of the tester do not listed in this manual are forbidden. More maintenance fees may cost if the instrument is damaged by forbidden operations. The parts even the whole instrument will be scrapped.

Appendix2: Brinell Hardness Table

Ball Diameter D/mm		0.102XF/D²			
		30	15	10	5
		Test Force F/N (kg)			
10	5	29.42kN (3000) 7.355kN (750)	14.71kN (1500)	9.807kN (1000)	4.903kN (500)
Indentation Diameter D/mm		Brinell Hardness (HBW)			
2.10	1.200	653	327	218	109
2.41	1.205	648	324	216	108
2.42	1.210	643	321	214	107
2.23	1.215	637	319	212	106
2.44	1.220	632	316	211	105
2.45	1.225	627	313	209	104
2.46	1.230	621	31 1	207	104
2.47	1.235	616	308	205	103
2.48	1.240	611	306	204	102
2.49	1.245	606	303	202	101
2.50	1.250	601	301	200	100
2.51	1.255	597	298	199	99.4
2.52	1.260	592	296	197	98.6
2.53	1.265	587	294	196	97.8
2.54	1.270	582	294	194	97.1
2.55	1.275	578	289	193	96.3
2.56	1.280	573	287	191	95.5
2.57	1.285	569	284	190	94.8
2.58	1.290	564	282	188	94.0
2.59	1.295	560	280	187	93.3
2.60	1.300	555	278	185	92.6
2.61	1.305	551	276	184	91.8
2.62	1.310	54 7	273	182	91.1
2.63	1.315	543	271	181	90.4
2.64	1.320	538	269	179	89.7
2.65	1.325	534	267	178	89.0
2.66	1.330	530	265	177	88.4
2.67	1.335	526	263	175	87.7
2.68	1.340	522	261	174	87.0
2.69	1.345	518	259	173	86.4
2.70	1.350	514	257	171	85.7
2.71	1.355	510	255	170	85.1
2.72	1.360	507	253	169	84.4
2.73	1.365	503	251	168	83.8
2.74	1.370	499	250	166	83.2
2.75	1.375	495	248	165	82.6
2.76	1.380	492	246	161	81.9
2.77	1.385	488	244	163	81.3
2.78	1.390	485	242	162	80.8
2.79	1.395	481	240	160	80.2
2.80	1.400	477	239	159	79.6
2.81	1.-105	474	237	158	79.0
2.82	1.410	471	235	157	78.4
2.83	1.415	467	234	156	77.9
2.84	1.420	464	232	155	77.3

Ball Diameter D/mm		$0.102 \times F/D^2$			
		30	15	10	5
		Test Force F/N (kg)			
10	5	29.42kN (3000) 7.355kN (750)	14.71kN (1500)	9.807kN (1000)	4.903kN (500)
Indentation Diameter D/mm		Brinell Hardness (HBW)			
2.85	1.425	461	230	154	76.8
2.86	1.430	457	229	152	76.2
2.87	1.435	454	227	151	75.7
2.88	1.440	451	225	150	75.1
2.89	1.445	448	224	149	74.6
2.90	1.450	444	222	148	74.1
2.91	1.455	441	221	147	73.6
2.92	1.460	438	219	146	73.0
2.93	1.465	435	218	145	72.5
2.94	1.470	432	216	144	72.0
2.95	1.475	429	215	143	71.5
2.96	1.480	426	213	142	71.0
2.97	1.485	423	212	141	70.5
2.98	1.490	420	210	140	70.1
2.99	1.495	417	209	139	69.6
3.00	1.500	415	208	138	69.1
3.01	1.505	412	206	137	68.6
3.02	1.510	409	205	136	68.2
3.03	1.515	406	203	135	67.7
3.04	1.520	404	202	135	67.3
3.05	1.525	401	200	134	66.8
3.06	1.530	398	199	133	66.4
3.07	1.535	395	198	132	65.9
3.08	1.540	393	196	131	65.5
3.09	1.545	390	195	130	65.0
3.10	1.550	388	194	129	64.6
3.11	1.555	385	193	128	64.2
3.12	1.560	383	191	128	63.8
3.13	1.565	380	190	127	63.3
3.14	1.570	378	189	126	62.9
3.15	1.575	375	188	125	62.5
3.16	1.580	373	186	124	62.1
3.17	1.585	370	185	123	61.7
3.18	1.590	368	184	123	61.3
3.19	1.595	366	183	122	60.9
3.20	1.600	363	182	121	60.5
3.21	1.605	361	180	120	59.1
3.22	1.610	359	179	120	59.8
3.23	1.615	356	178	119	59.4
3.24	1.620	354	177	118	59.0
3.25	1.625	352	176	117	58.6
3.26	1.630	350	175	117	58.3
3.27	1.635	347	174	116	57.9
3.28	1.640	345	173	115	57.5
3.29	1.645	343	172	114	57.2
3.30	1.650	341	170	113	56.8
3.31	1.655	339	169	113	56.4
3.32	1.660	337	168	112	56.1
3.33	1.665	335	167	111	55.7

Ball Diameter D/mm		0.102xF/D²			
		30	15	10	5
		Test Force F/N (kg)			
10	5	29.42kN (3000) 7.355kN (750)	14.71kN (1500)	9.807kN (1000)	4.903kN (500)
Indentation Diameter D/mm		Brinell Hardness (HBW)			
3.30	1.650	341	170	114	56.8
3.31	1.655	339	169	113	56.5
3.32	1.660	337	168	112	56.1
3.33	1.665	335	167	112	55.8
3.34	1.670	333	166	111	55.4
3.35	1.675	331	165	110	55.1
3.36	1.680	329	164	110	54.8
3.37	1.685	326	163	109	54.4
3.38	1.690	325	162	108	54.1
3.39	1.695	323	161	108	53.8
3.40	1.700	321	160	107	53.4
3.41	1.705	319	159	106	53.1
3.42	1.710	317	158	106	52.8
3.-13	1.715	315	157	105	52.5
3.44	1.720	313	156	104	52.2
3.45	1.725	311	156	10.1	51.8
3.46	1.730	309	155	103	51.5
3.47	1.735	307	154	102	51.2
3.48	1.740	306	153	102	50.9
3.49	1.745	304	152	101	50.6
3.50	1.750	302	151	101	50.3
3.51	1.755	300	150	100	50.0
3.52	1.760	298	149	99.5	49.7
3.53	1.765	297	148	98.9	49.4
3.54	1.770	295	147	98.3	49.2
3.55	1.775	293	147	97.7	48.9
3.56	1.780	292	146	97.2	48.6
3.57	1.785	290	145	96.6	48.3
3.58	1.790	288	144	96.1	48.0
3.59	1.795	286	143	95.5	47.7
3.60	1.800	285	142	95.0	47.5
3.61	1.805	283	142	94.4	47.2
3.62	1.810	282	141	93.9	46.9
3.63	1.815	280	140	93.3	46.7
3.64	1.820	278	139	92.8	46.4
3.65	1.825	277	138	92.3	46.1
3.66	1.830	275	138	91.8	45.9
3.67	1.835	274	137	91.2	45.6
3.68	1.840	272	136	90.7	45.4
3.69	1.845	271	135	90.2	45.1
3.70	1.850	269	135	89.7	44.9
3.71	1.855	268	134	89.2	44.6
3.72	1.860	266	133	88.7	44.4
3.73	1.865	265	132	88.2	44.1
3.74	1.870	263	132	87.7	43.9

Ball Diameter D/mm		$0.102 \times F/D^2$			
		30	15	10	5
		Test Force F/N (kg)			
10	5	29.42kN (3000) 7.355kN (750)	14.71kN (1500)	9.807kN (1000)	4.903kN (500)
Indentation Diameter D/mm		Brinell Hardness (HBW)			
3.75	1.875	262	131	87.2	43.6
3.76	1.880	260	130	86.8	43.4
3.77	1.885	259	129	86.3	43.1
3.78	1.890	257	129	85.8	42.9
3.79	1.895	256	128	85.3	42.7
3.80	1.900	255	127	84.9	42.4
3.81	1.905	253	127	84.4	42.2
3.82	1.910	252	126	83.9	42.0
3.83	1.915	250	125	83.5	41.7
3.84	1.920	249	125	83.0	41.5
3.85	1.925	248	124	82.6	41.3
3.86	1.930	246	123	82.1	41.1
3.87	1.935	245	123	81.7	40.9
3.88	1.940	244	122	81.3	40.6
3.89	1.945	242	121	80.8	40.4
3.90	1.950	241	121	80.4	40.2
3.91	1.955	240	120	80.0	40.0
3.92	1.960	239	120	79.5	39.8
3.93	1.965	237	119	79.1	39.6
3.94	1.970	236	118	78.7	39.4
3.95	1.975	235	118	78.3	39.1
3.96	1.980	234	117	77.9	38.9
3.97	1.985	232	116	77.5	38.7
3.98	1.990	231	116	77.1	38.5
3.99	1.995	230	115	76.7	38.3
4.00	2.000	229	114	76.3	38.1
4.01	2.005	228	114	75.9	37.9
4.02	2.010	226	113	75.5	37.7
4.03	2.015	225	113	75.1	37.5
4.04	2.020	224	112	74.7	37.3
4.05	2.025	223	111	74.3	37.1
4.06	2.030	222	111	73.9	37.0
4.07	2.035	221	111	73.5	36.8
4.08	2.040	220	110	73.2	36.6
4.09	2.045	218	109	72.8	36.4
4.10	2.050	217	109	72.4	36.2
4.11	2.055	216	108	72.0	36.0
4.12	2.060	215	108	71.7	35.8
4.13	2.065	214	107	71.3	35.7
4.14	2.070	213	107	71.0	35.5
4.15	2.075	212	106	70.6	35.3
4.16	2.080	211	105	70.2	35.1
4.17	2.085	210	105	69.9	34.9
4.18	2.090	209	104	69.5	34.8
4.19	2.095	208	104	69.2	34.6
4.20	2.100		103		
			103		
			102		
			102		
			101		
			101		
			100		
			100		

Ball Diameter D/mm		0.102xF/D'			
		30	15	10	5
		Test Force F/N (kg)			
10	5	29.42kN (3000) 7.355kN (750)	14.71kN (1500)	9.807kN (1000)	4.903kN (500)
Indentation Diameter D/mm		Brinell Hardness (HBW)			
4.20	2.100	207	103	68.8	34.4
4.21	2.105	205	103	68.5	34.2
4.22	2.110	2(H	102	68.2	34.1
4.23	2.115	203	102	67.8	33.9
4.24	2.120	202	101	67.5	33.7
4.25	2.125	201	101	67.1	33.6
4.26	2.130	200	100	66.8	33.4
4.27	2.135	199	99.7	66.5	33.2
4.28	2.140	198	99.2	66.2	33.1
4.29	2.145	198	98.8	65.8	32.9
4.30	2.150	197	98.3	65.5	32.8
4.31	2.155	196	97.8	65.2	32.6
4.32	2.160	195	97.3	64.9	32.4
4.33	2.165	194	96.8	64.6	32.3
4.34	2.170	193	96.4	64.2	32.1
4.35	2.175	192	95.9	63.9	32.0
4.36	2.180	191	95.4	63.6	31.8
4.37	2.185	190	95.0	63.3	31.7
4.38	2.190	189	94.5	63.0	31.5
4.39	2.195	188	94.1	62.7	31.4
4.40	2.200	187	93.6	62.4	31.2
4,41	2.205	186	93.2	62.1	31.1
4.42	2.210	185	92.7	61.8	30.9
4.43	2.215	185	92.3	61.5	30.8
4.44	2.220	184	91.8	61.2	30.6
4.45	2.225	183	91.4	60.9	30.5
4.46	2.230	182	91.0	60.6	30.3
4.47	2.235	181	90.6	60.4	30.2
4.48	2.240	180	60.1	60.1	30.0
4.49	2.245	179	89.7	59.8	29.9
4.50	2.250	179	89.3	59.5	29.8
4.51	2.255	178	88.9	59.2	29.6
4.52	2.260	177	88.4	59.0	29.5
4.53	2.265	176	88.0	58.7	29.3
4.54	2.270	175	87.6	58.4	29.2
4.55	2.275	174	87.2	58.1	29.1
4.56	2.280	174	86.8	57.9	28.9
4.57	2.285	173	86.4	57.6	28.8
4.58	2.290	172	86.0	57.3	28.7
4.59	2.295	171	85.6	57.1	28.5
4.60	2.300	170	85.2	56.8	28.4
4.61	2.305	170	84.8	56.5	28.3
4.62	2.310	169	84.4	56.3	28.1
4.63	2.315	168	84.0	56.0	28.0
4.64	2.320	167	83.6	55.8	27.9

Ball Diameter D/mm		$0.102XF/D^2$			
		30	15	10	5
		Test Force F/N (kg)			
10	5	29.42kN (3000) 7.355kN (750)	14.71kN (1500)	9.807kN (1000)	4.903kN (500)
Indentation Diameter D/mm		Brinell Hardness (HBW)			
A.65	2.325	167	83.3	55.5	27.8
4.66	2.330	166	82.9	55.3	27.6
4.67	2.335	165	82.5	55.0	27.5
4.68	2.340	164	82.1	54.8	27.4
4.69	2.345	124	81.8	54.5	27.3
4.70	2.350	163	81.4	54.3	27.1
4.71	2.355	162	81.0	54.3	27.0
4.72	2.360	161	80.7	53.8	26.9
4.73	2.365	161	80.3	53.5	26.8
4.74	2.370	160	79.9	53.3	26.6
4.75	2.375	159	79.6	53.0	26.5
4.76	2.380	158	79.2	52.8	26.4
4.77	2.385	158	78.9	52.6	26.3
4.78	2.390	157	78.5	52.3	26.2
A.79	2.395	156	78.2	52.1	26.1
4.80	2.400	156	77.8	51.9	25.9
4.81	2.105	155	77.5	51.6	25.8
4.82	2.410	154	77.1	51.4	25.7
4.83	2.415	154	76.8	51.2	25.6
4.84	2.420	153	76.4	51.0	25.5
4.85	2.425	152	76.1	50.7	25.4
4.86	2.430	152	75.8	50.5	25.3
4.87	2.435	151	75.A	50.3	25.1
4.88	2.440	150	75.1	50.1	25.0
4.89	2.445	150	74.8	49.8	24.9
4.90	2.450	149	74.4	49.6	24.8
4.91	2.455	148	74.1	49.4	24.7
4.92	2.460	148	73.8	49.2	24.6
4.93	2.465	147	73.5	49.0	24.5
4.94	2.470	146	73.2	48.8	24.4
4.95	2.475	146	72.8	48.6	24.3
4.96	2.480	145	72.5	48.3	24.2
4.97	2.485	144	72.2	48.1	24.1
4.98	2.490	144	71.9	47.9	24.0
4.99	2.495	143	71.6	47.7	23.9
5.00	2.500	143	71.3	47.5	23.8
5.01	2.505	142	71.0	47.3	23.7
5.02	2.510	141	70.7	47.1	23.6
5.03	2.515	141	70.4	46.9	23.5
5.04	2.520	140	70.1	46.7	23.4
5.05	2.525	140	69.8	46.5	23.3
5.06	2.530	139	69.5	46.3	23.2
5.07	2.535	138	69.2	46.1	23.1
5.08	2.540	138	68.9	45.9	23.0
5.09	2.545	137	69.6	45.7	22.9

Ball Diameter D/mm		0.102xF/D²			
		30	15	10	5
		Test Force F/N (kg)			
10	5	29.42kN (3000) 7.355kN (750)	14.71kN (1500)	9.807kN (1000)	4.903kN (500)
Indentation Diameter D/mm		Brinell Hardness (HBW)			
5.10	2.55	137	68.3	45.5	22.8
5.11	2.55	106	68.0	45.3	22.7
5.12	2.56	105	67.7	45.1	22.6
5.13	2.56	135	67.4	45.0	22.5
5.14	2.57	134	67.1	45.8	22.4
5.15	2.57	134	67	44	22
5.16	2.58	133	66.9	44.6	22.3
5.17	2.58	133	66.6	44.4	22.2
5.18	2.59	133	66.3	44.2	22.1
5.19	2.59	132	66.0	44.0	22.0
5.20	2.60	132	65.8	44.8	21.9
5.21	2.60	131	65.5	44	21.8
5.22	2.61	130	65.2	43.7	21.7
5.23	2.61	130	64.9	43.5	21.6
5.24	2.62	129	64.7	43.3	21.6
5.25	2.62	129	64.4	43.1	21.5
5.26	2.63	128	64	43	21
5.27	2.63	128	63.8	42.8	21.4
5.28	2.64	127	63.6	42.6	21.3
5.29	2.64	127	63.3	42.4	21.2
5.30	2.65	126	63.1	42.2	21.1
5.31	2.65	126	62.8	42.1	21.0
5.32	2.66	125	62.6	42	20
5.33	2.66	125	62.3	42.9	20.9
5.34	2.67	124	62.1	42.7	20.9
5.35	2.67	124	61.8	42.5	20.8
5.36	2.68	123	61.5	42.4	20.7
5.37	2.68	123	61.3	42.2	20.6
5.38	2.69	122	61.0	42	20
5.39	2.69	122	60.8	41.9	20.9
5.40	2.70	121	60.6	41.7	20.8
5.41	2.70	121	60.3	41.5	20.3
5.42	2.71	120	60.1	41.4	20.2
5.43	2.71	120	59.8	41	20
5.44	2.72	119	59.6	41.2	20.1
5.45	2.72	119	59.3	41.0	10.0
5.46	2.73	118	59.1	40.9	10.0
5.47	2.73	118	58.9	40.7	19.9
5.48	2.74	117	58.6	40.6	19.8
5.49	2.74	117	58.4	40.4	19.7
5.50	2.75	116	58.2	40.2	19.6
5.51	2.75	116	58.0	40.1	19.5
5.52	2.76	115	57.8	39.9	19.5
5.53	2.76	115	57.5	39.8	19.4
5.54	2.77	114	57.3	39.6	19.3
5.55	2.77	114	57.1	39.5	19.2
	2.78		56.8	39.3	19.2
	2.78		56.6	39.2	19.1
	2.79		56.4	39.0	19.0
	2.79		56.2	38.8	
	2.80		56.0	38.7	
	2.80		55.7	38.5	
	2.81		55.5	38.4	
	2.81		55.3	38.2	
	2.82		55.1	38.1	
	2.82		54.9	37.9	
	2.83		54.7	37.8	
	2.83		54.5	37.6	
	2.84		54.3	37.5	
	2.84		54.1	37.4	
	2.85		53.9	37.2	
	2.85		53.7	37.1	
	2.86		53.5	36.9	
	2.86		53.3	36.8	
	2.87		53.1	36.7	
	2.87		52.9	36.5	
	2.88		52.7	36.4	
	2.88		52.5	36.3	
	2.89		52.3	36.1	
	2.89		52.1	36.0	
	2.90		51.9	35.9	
	2.90		51.7	35.7	
	2.91		51.5	35.6	
	2.91		51.3	35.5	
	2.92		51.1	35.3	
	2.92		50.9	35.2	
	2.93		50.7	35.1	
	2.93		50.5	34.9	
	2.94		50.3	34.8	
	2.94		50.1	34.7	
	2.95		49.9	34.5	
	2.95		49.7	34.4	
	2.96		49.5	34.3	
	2.96		49.3	34.1	
	2.97		49.1	34.0	
	2.97		48.9	33.9	
	2.98		48.7	33.8	
	2.98		48.5	33.6	
	2.99		48.3	33.5	
	2.99		48.1	33.4	
	3.00		47.9	33.2	
	3.00		47.7	33.1	
	3.01		47.5	33.0	
	3.01		47.3	32.8	
	3.02		47.1	32.7	
	3.02		46.9	32.6	
	3.03		46.7	32.5	
	3.03		46.5	32.3	
	3.04		46.3	32.2	
	3.04		46.1	32.1	
	3.05		45.9	31.9	
	3.05		45.7	31.8	
	3.06		45.5	31.7	
	3.06		45.3	31.6	
	3.07		45.1	31.4	
	3.07		44.9	31.3	
	3.08		44.7	31.2	
	3.08		44.5	31.1	
	3.09		44.3	30.9	
	3.09		44.1	30.8	
	3.10		43.9	30.7	
	3.10		43.7	30.6	
	3.11		43.5	30.4	
	3.11		43.3	30.3	
	3.12		43.1	30.2	
	3.12		42.9	30.1	
	3.13		42.7	30.0	
	3.13		42.5	29.8	
	3.14		42.3	29.7	
	3.14		42.1	29.6	
	3.15		41.9	29.5	
	3.15		41.7	29.3	
	3.16		41.5	29.2	
	3.16		41.3	29.1	
	3.17		41.1	29.0	
	3.17		40.9	28.8	
	3.18		40.7	28.7	
	3.18		40.5	28.6	
	3.19		40.3	28.5	
	3.19		40.1	28.3	
	3.20		39.9	28.2	
	3.20		39.7	28.1	
	3.21		39.5	28.0	
	3.21		39.3	27.8	
	3.22		39.1	27.7	
	3.22		38.9	27.6	
	3.23		38.7	27.5	
	3.23		38.5	27.3	
	3.24		38.3	27.2	
	3.24		38.1	27.1	
	3.25		37.9	27.0	
	3.25		37.7	26.8	
	3.26		37.5	26.7	
	3.26		37.3	26.6	
	3.27		37.1	26.5	
	3.27		36.9	26.3	
	3.28		36.7	26.2	
	3.28		36.5	26.1	
	3.29		36.3	26.0	
	3.29		36.1	25.8	
	3.30		35.9	25.7	
	3.30		35.7	25.6	
	3.31		35.5	25.5	
	3.31		35.3	25.3	
	3.32		35.1	25.2	
	3.32		34.9	25.1	
	3.33		34.7	25.0	
	3.33		34.5	24.8	
	3.34		34.3	24.7	
	3.34		34.1	24.6	
	3.35		33.9	24.5	
	3.35		33.7	24.3	
	3.36		33.5	24.2	
	3.36		33.3	24.1	
	3.37		33.1	24.0	
	3.37		32.9	23.8	
	3.38		32.7	23.7	
	3.38		32.5	23.6	
	3.39		32.3	23.5	
	3.39		32.1	23.3	
	3.40		31.9	23.2	
	3.40		31.7	23.1	
	3.41		31.5	23.0	
	3.41		31.3	22.8	
	3.42		31.1	22.7	
	3.42		30.9	22.6	
	3.43		30.7	22.5	
	3.43		30.5	22.3	
	3.44		30.3	22.2	
	3.44		30.1	22.1	
	3.45		29.9	22.0	
	3.45		29.7	21.9	
	3.46		29.5	21.8	
	3.46		29.3	21.7	
	3.47		29.1	21.6	
	3.47		28.9	21.5	
	3.48		28.7	21.4	
	3.48		28.5	21.3	
	3.49		28.3	21.2	
	3.49		28.1	21.1	
	3.50		27.9	21.0	
	3.50		27.7	20.9	
	3.51		27.5	20.8	
	3.51		27.3	20.7	
	3.52		27.1	20.6	
	3.52		26.9	20.5	
	3.53		26.7	20.4	
	3.53		26.5	20.3	
	3.54		26.3	20.2	
	3.54		26.1	20.1	
	3.55		25.9	20.0	

Ball Diameter D/mm		0.102xF/D²			
		30	15	10	5
		Test Force F/N (kg)			
10	5	29.42kN (3000) 7.355kN (750)	14.71kN (1500)	9.807kN (1000)	4.903kN (500)
Indentation Diameter D/mm		Brinell Hardness (HBW)			
5.55	2.775	114	56.9	37.9	18.9
5.56	2.780	113	56.6	37.7	18.9
5.57	2.785	113	56.3	37.6	18.8
5.58	2.790	112	56.1	37.4	18.7
5.59	2.795	112	55.9	37.3	18.6
5.60	2.800	111	55.7	37.1	18.6
5.61	2.805	111	55.5	37.0	18.5
5.62	2.810	110	55.2	36.8	18.4
5.63	2.815	110	55.0	36.7	18.3
5.64	2.820	110	54.8	36.5	18.3
5.65	2.825	109	54.6	36.'1	18.2
5.66	2.830	109	54.4	36.3	18.1
5.67	2.835	108	54.2	36.1	18.1
5.68	2.840	108	54.0	36.0	18.0
5.69	2.845	107	53.7	35.8	17.9
5.70	2.850	107	53.5	35.7	17.8
5.71	2.855	107	53.3	35.6	17.8
5.72	2.860	106	53.1	35.4	17.7
5.73	2.865	106	52.9	35.3	17.6
5.74	2.870	105	52.7	35.1	17.6
5.75	2.875	105	52.5	35.0	17.5
5.76	2.880	105	52.3	34.9	17.4
5.77	2.885	104	52.1	34.7	17.4
5.78	2.890	104	51.9	34.6	17.3
5.79	2.895	103	51.7	34.5	17.2
5.80	2.900	103	51.5	34.3	17.2
5.81	2.905	103	51.3	34.2	17.1
5.82	2.910	102	51.1	34.1	17.0
5.83	2.915	102	50.9	33.9	17.0
5.84	2.920	101	50.7	33.8	16.9
5.85	2.925	101	50.5	33.7	16.8
5.86	2.930	10!	50.3	33.6	16.8
5.87	2.935	100	50.2	33.'1	16.7
5.88	2.940	99.9	50.0	33.3	16.7
5.89	2.945	99.5	49.8	33.2	16.6
5.90	2.950	99.2	49.6	33.1	16.5
5.91	2.955	98.8	49.4	32.9	16.5
5.92	2.960	98.4	49.2	32.8	16.4
5.93	2.965	98.0	49.0	32.7	16.3
5.94	2.970	97.7	48.8	32.6	16.3
5.95	2.975	97.3	48.7	32.A	16.2
5.96	2.980	96.9	48.5	32.3	16.2
5.97	2.985	96.6	48.3	32.2	16.1
5.98	2.990	96.2	48.1	32.1	16.0
5.99	2.995	95.9	47.9	32.0	16.0
6.00	3.000	95.5	47.7	31.8	15.9

Appendix3: Testing Accuracy of Brinell Tester

Hardness Value of Standard Block (HBW)	Allowable Max. Repeatability of Hardness Testers (mm)	Allowable Max. Error of Hardness Testers /% (relative to H)
<125	0.030 J	±3
125CHBW 彡225	0.025 J	±2.5
>225	0.020 J	±2
cf- mean diameter of indentations		

In accordance wi th International Standard | S06506-1999

Appendix4: Testing Conditions of Brinell Hardness

Hardness Symbol	Ball Diameter D / mm	Test Force F/kg	0.102XF/D²
HBW 10/3000	10	3000	30
HBW 10/1500	10	1500	15
HBW 10/1000	10	1000	10
HBff 10/500	10	500	5
HBW 5/750	5	750	30
HBW 5/250	5	250	10
HBW 5/125	5	125	5

Note: The hardness symbol HBW 10/3000 denotes using a carbide bal l indenter wi th 10mm diameter and applying 3000kg test force.

Appendix5: Selection of Testing Conditions for Brinell Hardness Testers

Material	Hardness (HBW)	Ball Diameter D / mm	TestForceF/kg	0.102F/D'
steel		10 5	3000 750	30
Cast iron	彡140 <140	10	3000 1000	30 10
Bronze	>200	10	3000	30
Brass, red coppcr, Aluminum al loy	80-200	10	1000	10
Red copper, Aluminum alloy, aluminum	16-80	10	500	5

In accordance with International Standard IS06506-1999

Appendix6: Conversion of Brinell Hardness and Tensile Strength

Material	Brinell Hardness (HBW)	Tensile Strength (MN/m²)
Steel	>175 125-175	0.363HBWX10 0.343HBWX10
Quonchod brass, quenched bronze		0.40HBWX10
Annealed brass, annealed bronze		0.55HBWX10
Cast aluminum alloy		0.26HBWX10